Mechanical Linear Drive **Beta 140-ZRSD**

with toothed belt drive and roller guide and a second independently travelling carriage

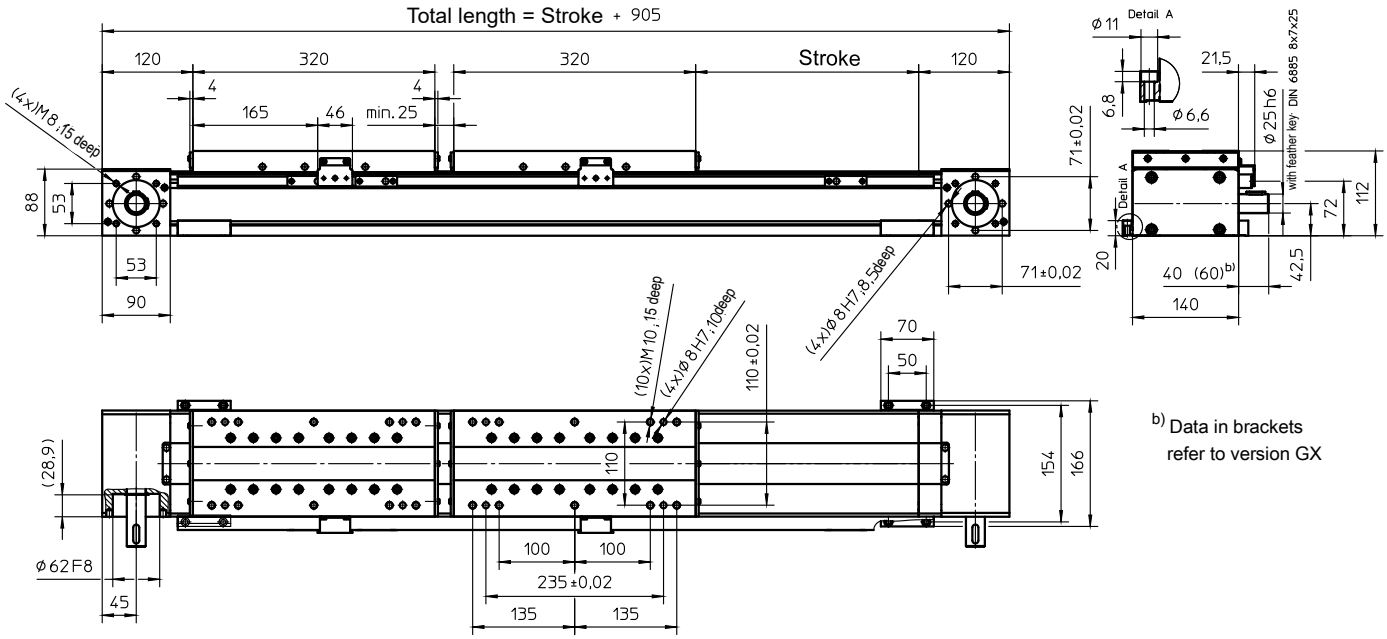

b) Data in brackets refer to version GX

Weights	ZRSD
Basis length without stroke:	19.20 kg
100 mm stroke:	1.30 kg
Entire carriage 320 mm:	6.30 kg
Max. total length:	4000 mm
(longer on request)	

Technical Data	ZRSD
Max. speed:	8.00 m/s
Max. acceleration:	60 m/s²
Repeat accuracy:	±0.08 mm
Idle torque:	285 Nm
Moment of inertia:	5.55 •10^{-3} kgm²
Drive element:	Zahnriemen **16 AT10**
Stroke per revolution:	180 mm

Forces and moments

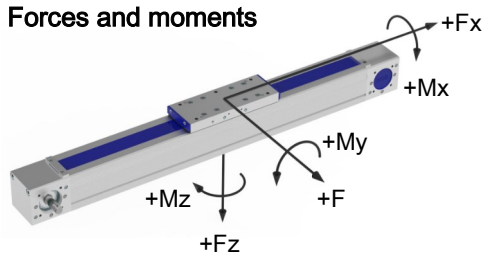

	ZRSD
Forces	Dynamic [N]
F_X d)	1000
F_Y	2500
F_Z	5000
$-F_Z$	3000
Moments	Dynamic [Nm]
M_X	350
M_Y	700
M_Z	500

d) Maximalwert (siehe Diagramm „Fx-v-Diagram“)

F_X - v - Diagram

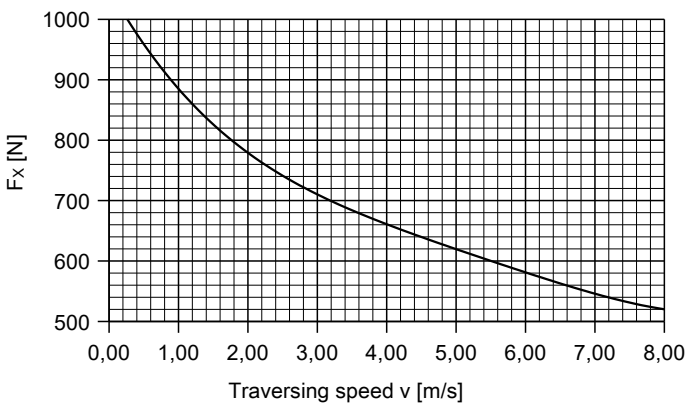

For mechanical linear drives with roller guide, the static load rating “C_{stat}” (see catalogue page TL11) applies for static loads.