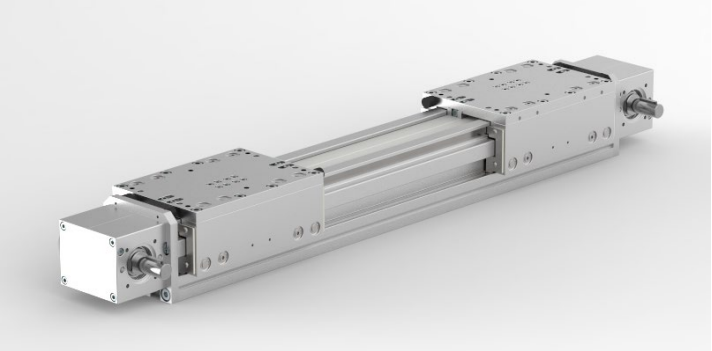

Original Assembly and Maintenance Instructions

Portal linear unit

HSB-sigma®

Types
Sigma 90-ZRSD
Sigma 120-ZRSD
Sigma 160-ZRSD

HSB Automation GmbH
In Laisen 74
72766 Reutlingen
Germany
Tel. +49 7121 14498-0
Fax +49 7121 14498-10
Info@HSB-Automation.de
www.HSB-Automation.de

Table of contents

1 Safety 2

1.1 Symbols used 2

1.2 Intended use 2

1.3 General safety 3

1.4 Use in potentially explosive areas 3

1.5 Technical condition of the linear unit 3

1.6 Changes to the linear unit 3

1.7 Requirements for personnel 4

1.8 Responsibilities of the operator 4

2 Warranty 4

3 Technical data – standard design 5

4 Product description 8

5 Transport and storage 9

6 Assembly and alignment 10

6.1 Assembling the linear unit with mounting brackets 10

6.2 Screw linear unit into place from underneath 11

6.3 Setting the maximum stroke 11

6.4 Installing the drive 12

6.4.1 Installing the motor 12

7 Commissioning 13

8 Operation 14

9 Decommissioning 15

10 Maintenance 16

10.1 Lubrication 16

10.2 Replacing the toothed belt 18

1 Safety

These Operating Instructions are an important part of the unit and must always be kept within reach.
They must be passed on together with the unit to any third party.

It is important that you contact the manufacturer should there be any part of these Operating Instructions that you do not clearly understand.

1.1 Symbols used

In these Operating Instructions, the following warning symbols and other symbols are used:

DANGER

Indicates immediate danger.
Failure to comply with this instruction risks death or serious injury.

WARNING

Indicates a danger carrying a medium to high risk.
Failure to comply with this instruction may result in death or serious injury.

CAUTION

Indicates a danger carrying low risk.
Failure to comply with this instruction may result in minor or moderate injury or material damage.

☛ Note
Includes tips for the operation and optimum use of the unit.

1.2 Intended use

The linear unit is solely intended for the purpose of manipulating, positioning, transporting, palletising, loading, unloading, clamping, synchronising, tensioning, testing, measuring, handling and pressing of component parts or tools.

Please take note of the principal fields of application of the linear unit (see Section 4 and Section 3).

In order to guarantee compliance with the law concerning the electromagnetic compatibility of devices (EMC directive), the linear unit may only be used for industrial applications (in accordance with EN 61000-6-1).

Utilisation of the product for any other purpose would constitute inappropriate use. The manufacturer accepts no liability for any damage resulting from such use. The risk is borne solely by the user.

1.3 General safety

Date of commissioning

The linear unit may only be operated when the machine or installation into which it has been built is found to comply with the following guidelines, laws, regulations and standards:

- EC/EU directives,
- standards regarding the electromagnetic compatibility of units,

Safe operation

For safe operation, please take into account the following documentation:

- these Operating Instructions for the linear unit, in particular the technical data,
- the Operating Instructions for the entire installation.

Decommissioning

Dispose of the product in accordance with the applicable national requirements. Observe the safety data sheets.

1.4 Use in potentially explosive areas

The linear units are not suitable for use in potentially explosive atmospheres.

1.5 Technical condition of the linear unit

State of the art

The unit conforms to the current state of the art and applicable rules and regulations. The device complies with the EC Machinery Directive and the relevant Harmonised Standards (European standards). Furthermore, the EC Declaration of Incorporation applies.

1.6 Changes to the linear unit

Rebuilding and modifying

There are to be no changes, either structural or safety-related, carried out on the linear unit without the prior written agreement of HSB. We accept no liability for any unauthorised changes carried out on the unit.

The operator may only carry out the maintenance and repair work specified in these Operating Instructions. Any further work involving the replacement of wearing or substitute parts may only be carried out following consultation with our service technicians and by the service technicians themselves or by HSB.

Never remove or decommission any safety or protection devices.

Follow the assembly instructions supplied by the manufacturer when using special attachment parts.

1.7 Requirements for personnel

Any work involving live parts may only be carried out by trained electricians. This work involves, for example:

- installation of safety limit switches,
- attachment of a drive,
- checking the drive rotation direction.

1.8 Responsibilities of the operator

Preservation of labels The operator must ensure that any lettering, information signs or labels are fully legible (in particular the serial number) and always observed. Any damaged or illegible information signs and labels must be replaced.

2 Warranty

The warranty conditions are specified in the sales documents (delivery and payment conditions). The warranty claim expires if:

- the unit has not been used in accordance with its intended use,
- these Operating Instructions have not been adhered to,
- the unit has been modified without prior authorisation from the manufacturer,
- screws sealed using locking paint have been opened.

The manufacturer is liable only if genuine spare parts have been used during any maintenance or repair work carried out on the unit.

3 Technical data – standard design

Technical data **Linear unit type Sigma ZRSD**	**Unit sizes**				
		90	**120**	**160**	
Drive element		Toothed belt			
		16AT5-E	25ATL10	32AT10	
Moment of inertia [kgm²]		1.70×10^{-3}	4.92×10^{-3}	7.16×10^{-2}	
Stroke per revolution [mm]		175	200	210	
Max. speed [m/s]		8	8	8	
Max. acceleration [m/s²]		60	60	60	
Idle torque [Nm]		3.20	3.00	3.50	
Maximum stroke (standard) [mm]		7595	7420	5390	
Length of standard carriage [mm]		150	220	250	
Repeat accuracy [mm]		± 0.08	± 0.08	± 0.08	
Operating temperature [°C] (continuous operation)		0 ... 80	0 ... 80	0 ... 80	
Geometrical moment of inertia I_Y [mm⁴]		1011977	4001551	7080449	
Geometrical moment of inertia I_Z [mm⁴]		1806496	5857612	14157096	
Weight (without stroke) [kg]		8.40	24.85	28.10	
Weight (per 100 mm stroke) [kg]		0.65	1.20	1.68	
Weight of standard carriage [kg]		1.80	3.70	5.75	
Max. noise emission [dB A] [1)]		75	75	75	

[1)] The value changes when assembled with other parts of the installation

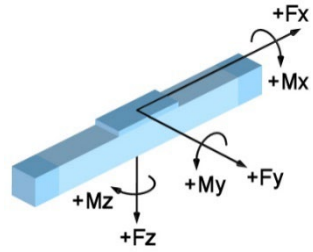

Forces and torques for Sigma linear unit with toothed belt drive

Type designation	Dynamic forces [N]				Dynamic torques [Nm]			
	F_X	F_Y	F_Z	$-F_Z$	M_X	M_Y	M_Z	M_{idle}
Gamma 90-ZRSD	650	2000	2500	1500	120	160	150	3.20
Gamma 120-ZRSD	1800	2300	3000	1800	170	270	270	3.00
Gamma 160-ZRSD	2300	4500	6000	4000	500	700	700	3.50

M_{idle} = Idle torque ±30 %

The specified forces and torques are the respective maximum values for the single load. The individual values must be reduced for a mixed load or the occurrence of several torques or forces at the same time. If in doubt, please contact Technical Support.

Static and dynamic load ratings of the roller guides in the Sigma ZRSD linear unit

Unit size	Size (∅) [mm]	Number of bearing rollers for Fz	Number of bearing rollers for Fy	Load rating per roller C_{stat} [N]	Load rating per roller C_{dyn} [N]	Guiding distance* in direction x [mm]		Guiding distance in direction y [mm]
						lx1	lx2	ly
Sigma 90-ZRSD	24	4	4	1240	2750	76 (126)	99 (149)	77
Sigma 120-ZRSD	28	4	4	1300	3200	130 (260)	160 (290)	99
Sigma 160-ZRSD	35	4	4	3000	6800	145 (295)	177 (327)	135

The pretensioning per roller is approx. 5%.

Tightening torques [Nm] for fixing screws							
Fixing screws	**M4**	**M5**	**M6**	**M8**	**M10**	**M12**	The figures given are intended as guides. For shorter insertion depths, the figures must be adjusted accordingly.
DIN912/ISO4762-8.8	2,7	5,4	9,0	22,0	43,0	74,0	
DIN912/ISO4762-10.9	3,0	5,7	9,0	22,0	43,0	74,0	
DIN912/ISO4762-12.9	3,0	5,7	9,0	22,0	43,0	74,0	

Tightening torques [Nm] for coupling with clamping hub					
Size	**14**	**19**	**24**	**28**	**38**
Coupling diameter [mm]	30	40	55	65	80
Screw size	M3	M6	M6	M8	M8
Tightening torque [Nm]	1.34	10.50	10.50	25.00	25.00

Tightening torques [Nm] for coupling with clamping hub					
Size	**14**	**19**	**24**	**28**	**38**
Coupling diameter [mm]	30	40	55	65	80
Screw size	M3	M4	M5	M5	M6
Tightening torque [Nm]	1.34	2.90	6.00	6.00	10.00

4 Product description

Guide elements for the track roller guide

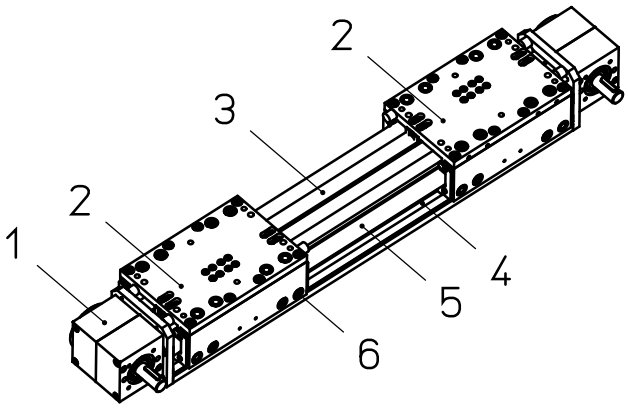

Legend	1	Bearing housing	4	Guide band
	2	Carriages	5	Basic profile
	3	Toothed belt	6	Track roller

Figure 1: Guide elements for the Sigma ZRS linear unit

A mechanical linear unit converts rotation into linear motion and thus facilitates fast, safe and accurate movement of loads from one position to another. It consists of a basic aluminium profile, (at least) one moveable carriage that is supported by a guide element (track roller guide), and a drive element (toothed belt drive).

Depending on the design, the carriage can absorb forces and torques in all directions and is non-positively connected to the guide and drive element via the slide plate.

The basic profile is self-supporting up to a certain length and fitted with grooves to keep it in place.

The operating area can be flexibly arranged. Several Sigma linear units can be configured to cover a large area (2 axes) or in a spatial arrangement (3 axes).
A plate can be used to connect driven linear units to non-driven linear units of the same type, for example in order to be able to take on large loads.

5 Transport and storage

The mechanical linear unit is a precision instrument. Any heavy impact to this instrument may damage the mechanics and impair its functionality.

CAUTION

Risk of damage by heavy impact or bending!
Only transport an assembled linear unit using transport locks.

In order to avoid any damage to the linear unit when storing or transporting it, the following measures must be taken in order to protect it from jolting or slipping:

- Transport the unit in a sufficiently large container
- Use cushioned packaging

The weight values for the units are listed in Section 3.

The units must be protected against:

- dirt,
- corrosion,
- water
- and an aggressive atmosphere.

6 Assembly and alignment

The linear unit can be mounted as follows:

- With mounting brackets
- With screws in the sliding blocks
- With screws in the factory-fitted threaded rails

☛ Mount the linear unit only on a flat surface. Standard parallelism <0.2 mm/1000 mm.

☛ Mounting the linear unit using the threaded rails is recommended for the following situations:

- For highly dynamic applications
- For just 2 fixing points on the linear unit

6.1 Assembling the linear unit with mounting brackets

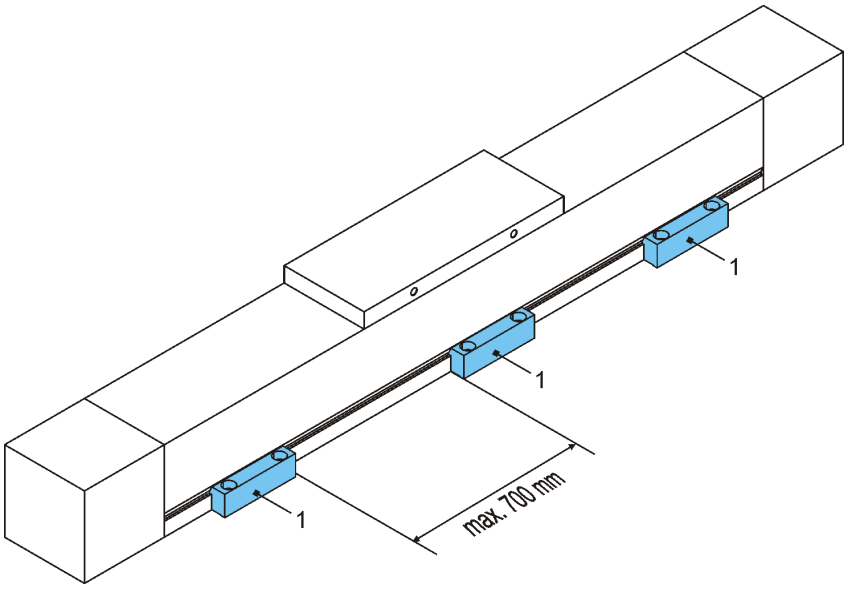

Figure 2: Mounting brackets (1)

☛ The recommended maximum distance between the mounting brackets is 700 mm.

Proceed as follows

1. Loosely fit the mounting brackets (1) into position (Figure 2).
2. Align the linear unit axially.
3. Screw the mounting brackets (1) into place (for tightening torques refer to Section 3).

6.2 Screw linear unit into place from underneath

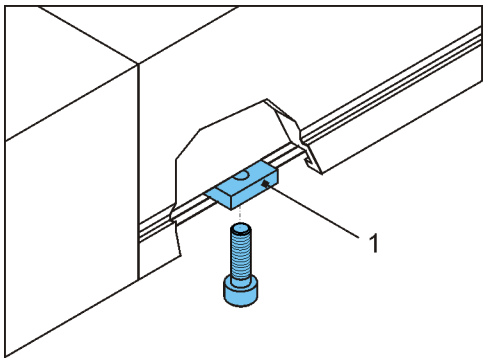

Figure 3: Sliding blocks (1) in the groove on the underside of the basic profile

Secure the linear unit using fastening screws from below using the sliding blocks or the threaded rails in the basic aluminium profile (Figure 3).

Proceed as follows

1. Align the linear unit.
2. Align the sliding blocks (1) / threaded rails.
3. Screw the linear unit into place
   (for tightening torques refer to Section 3).

6.3 Setting the maximum stroke

DANGER

Risk of serious injury from overturning transport devices.
Should the carriage come to a stop beyond the safety area, the transport device mounted on this may break off or overturn. This can destroy the linear unit.
Please take note of the specified safety area when setting up the unit and set the limit switches correspondingly.
Electric switches may only be connected by a qualified electrician.

☛ Allow for a sufficient braking distance to ensure that there is enough time to slow down the carriage in the case of an emergency stop.

6.4 Installing the drive

6.4.1 Installing the motor

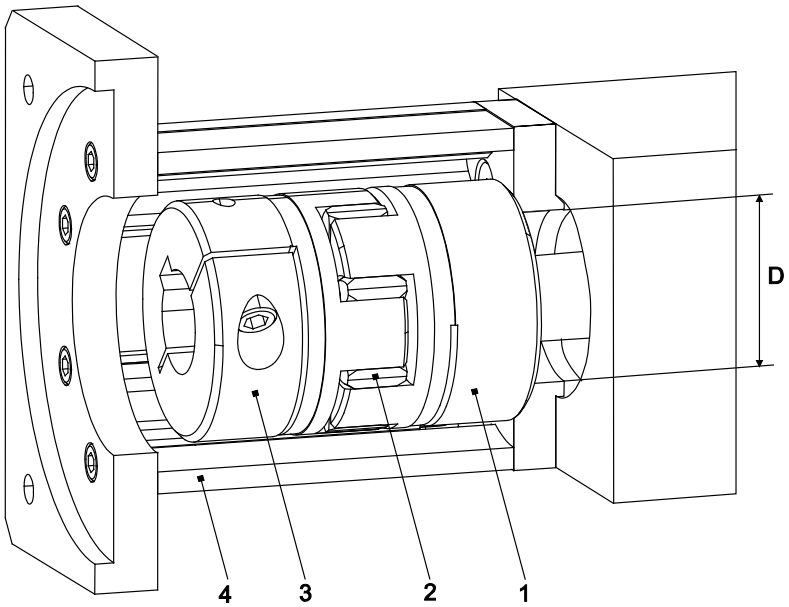

Legend				
	1	Coupling half 1	4	Motor mounting
	2	Coupling collar	D	Diameter at motor mounting
	3	Coupling half 2		

Figure 4: Motor mounting with motor coupling at drive journal

Proceed as follows

1. Place the motor and the coupling elements in the mounting position alongside the linear unit.
2. Check the direction of rotation of the motor. Change the direction of rotation of the motor if required.
3. If the coupling diameter is smaller than the D measurement at the motor mounting (4), first mount the coupling half 1 (1) (bore flush with the drive shaft) and then the motor mounting (4) (Figure 4).

   If the coupling diameter is larger than the D measurement at the motor mounting (4), first mount the motor mounting (4) and then the coupling half 1 (1) (bore flush with the drive shaft). Tighten the coupling clamping screw using the mounting bore at the motor mounting (4).
4. If necessary, push the coupling collar (2) onto the coupling.
5. Fix the coupling half 2 (3) to the motor journal.
6. Attach the motor to the motor mounting.

Tightening torque [Nm] of clamping screws

Screw	SW	Torque
M6	5	14
M8	6	35
M10	8	65
M12	10	74

7 Commissioning

WARNING

Risk of injury or damage to other installation parts
as a result of quick linear movements of the transport device
due to centrifugal load.
Only authorised personnel are permitted to commission the linear unit.

DANGER

Risk of crushing due to incorrect direction of movement of the transport device.
Should the direction of rotation of the drive (motor or gearbox) and the carriage drive (spindle or toothed belt) not correspond, the mounted transport device may travel in the wrong direction. Around all rotating parts (e.g. the GX shaft), there is a risk of being pulled in, and of clothing or body parts being caught up and trapped. There is also a risk of crushing around the moving carriage and the rack-and-pinion. These hazards can be countered by installing effective safety mechanisms that comply with the current standards and are state-of-the-art. These are not supplied with the linear unit and must be installed by the manufacturer of the overall installation.
Only qualified electricians are permitted to carry out any work on the electrical installation or check the direction of rotation.

Checking the unit before commissioning

Before commissioning, the following must be checked:

- whether the holding devices used are consistent with the mass and acceleration information provided by the manufacturer,
- whether the machine or installation in which the linear unit is installed corresponds to the provisions set out by the machinery directive, the harmonised standards, the European standards or the national standards,
- whether the linear unit is correctly mounted,
- whether the inductive and/or mechanical limit switches are correctly connected and functioning properly,
- whether the direction of rotation of the motor shaft and, if applicable, the intermediary gearbox corresponds to the direction of rotation of the spindle or the toothed belt.

If there are faults detected during this inspection, commissioning is not permitted.

Test run

To prevent accidents, collisions and possible errors in the programming, move the linear unit along the stroke several times at such a low speed that it can be stopped in good time in case of an emergency.

The installation can be started up after it has been ensured that there is no risk of a collision when exceeding the maximum stroke.

8 Operation

WARNING

The drive motor can heat up considerably during operation.
In this case, refer to the operating instructions supplied for the drive motor. .

CAUTION

Risk of damage due to harmful environmental influences!
The linear unit may only be operated under ambient conditions which are permitted by the manufacturer.

Ambient conditions

The linear unit may only be operated within the permitted temperature range of 0 - 80 °C.

Operating the unit in damp, abrasive conditions may result in foreign objects entering components in the linear unit. To prevent this, as part of the integration of the linear unit into the entire plant, measures may need to be taken to prevent foreign bodies from penetrating, e.g. using folding plates, baffle plates, sealing air.

Required inspection

The linear unit must be occasionally checked during operation to see that it is functioning correctly.

The personnel responsible must check the linear unit and the machinery for any visible signs of damage or defects at least once during each shift.

Should there be any changes observed which may compromise safety, it must be switched off immediately.

Emergency stop

The maximum permissible load values must not be exceeded even in an emergency stop situation.

As a rule, the category 1 emergency stop strategy (targeted braking to standstill, then de-energise) is chosen for automation equipment with moving masses. A simple emergency stop strategy is not usually effective, as the masses are still moving and can cause damage.

End position damping

The end stops and stop buffers installed in our linear modules protect the unit at low speed (commissioning). They are definitely not intended to completely protect the unit against damage at high speed and/or with a large mass.

9 Decommissioning

WARNING

Risk of injury or damage to other installation parts
due to falling installation parts.
Only authorised personnel are permitted to disassemble the linear unit.

1. Separate the machine/installation from the mains supply.
2. Disassemble the drive from the linear unit.
3. Unscrew the linear unit from the machine/installation.

10 Maintenance

DANGER

Around all rotating parts (e.g. the GX shaft), there is a risk of being pulled in, and of clothing or body parts being caught up and trapped. There is also a risk of crushing around the moving carriage and the toothed belt.
For this reason, the drive of the linear unit must be shut down during cleaning work and secured against being restarted.

- All mounted ball bearings (and track rollers) are sealed and maintenance-free.
- Remove excess dust and incidence of dirt from the parts of the linear unit on a regular basis.
- The toothed belt is maintenance-free. Replace the toothed belt should there be any breakage or strain beyond the elastic area.

10.1 Lubrication

The track rollers of the linear unit are lubricated for life and do not require any further maintenance. The contact surface between the track rollers and the guide bands is also lubricated for life by oil-soaked felts. However, certain influencing factors may mean that relubrication is necessary. A visual inspection of the conveyors (e.g. for discolouration) should therefore be performed according to the following lubrication plan.

Influencing factors

The following influencing factors are important for an accurate regulation of lubrication intervals:

- Load
- Speed
- Motion sequence
- Operating temperature
- Degree of contamination

Lubrication intervals

Lubrication intervals are required for:

- operation under the influence of dust and dampness
- heavy load
- high speed (up to V_{max})
- short strokes

Initial lubrication

☛ The basic lubrication has already been carried out by the manufacturer.

Refer to the lubrication regulations in the following sections.

Lubrication points for linear units

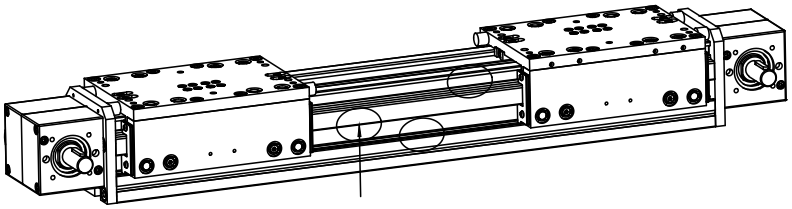

Figure 5: Lubrication points (markings) on both sides

The track rollers of the roller guide are lubricated for life. The conveyors are wetted with oil by oil-soaked felts and do not require any relubrication in normal operation. Depending on the ambient conditions (e.g. impurities), however, it is recommended to clean the guide bands with a lint-free cloth if necessary and to perform relubrication according to the specifications stated below.

Lubrication method

If relubrication is required, the lubricating oil can be thinly applied to the guide rails using a spray bottle (or brush) and is then further distributed on the bands by the felts.

Lubrication plan for the roller guide

Lubrication interval	Oil quantity	Oil type
Visual inspection every 5,000 km*	As required	Chain oil e.g. Klüberoil CM 1-220 (or similar oil based on mineral oil in accordance with ISO-VG 220) ☛ Please take note of the instructions provided by the lubricant manufacturer should a different type of oil be used!
** Or at least twice a year. The lubrication interval depends on the ambient conditions and the load.*		

10.2 Replacing the toothed belt

☛ For optimum functioning of the linear unit and to prevent damage during operation, it must be ensured during assembly that no foreign bodies enter any parts of the linear unit.

☛ Do not damage the standard parts (screws, pins, etc.) as they will be used again.

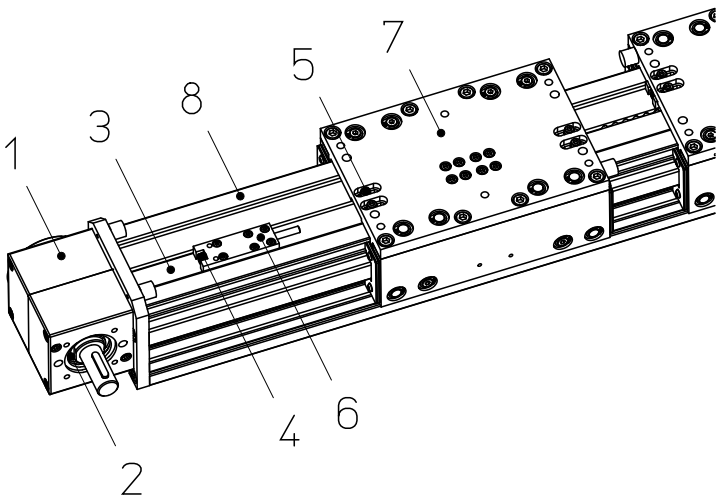

Legend	1	Bearing housing	5	Clamping screw
	2	Synchronising disc (internal)	6	Toothed belt holder, compl.
	3	Toothed belt	7	Carriages
	4	Tensioning screw	8	Basic profile

Figure 6: Replacing the toothed belt

1. Loosen the clamping screws (5) on the toothed belt holders (6).
2. Loosen the tensioning screws (4) on the toothed belt holders (6) on both sides of the carriage (7).
3. Place both toothed belt holders on the basic profile (8).
4. Unscrew the clamping plates from the toothed belt holders (6 screws each).
5. Attach one end of the new toothed belt to the end of the old toothed belt (3) using adhesive tape, making it easier to pull into the drive housing.

☛ When sticking the two ends together, the tooth pitch of both belts must correspond to enable the new toothed belt to engage with the synchronising disc (2).

6. Take hold of the other free end of the defective toothed belt and pull both toothed belts slowly through the drive housing (1). The new toothed belt can be easily fed and thus pulled into the housing.

7. Mount the toothed belt holders to both ends of the new toothed belt.

8. Secure the toothed belt holders to the carriage again in the opposite order using the tensioning and clamping screws but do not tension the toothed belt. (Note: The tensioning screws must be secured with Loctite 243.)

9. Now tension the toothed belt.

10. Set the required tension accurately using a belt tensioning measurement device (see Operating Instructions for the measurement device).

☛ Only the required tension which is correctly set will guarantee optimal operation of the unit.

11. The measuring position and the Hz figure applicable for the toothed belt are supplied with the replacement toothed belt. Tension the toothed belt in such a way that the Hz figure given is shown.

12. Tighten the clamping screws.