With toothed belt drive and double linear guide a second independently travelling carriage (ZSSD)

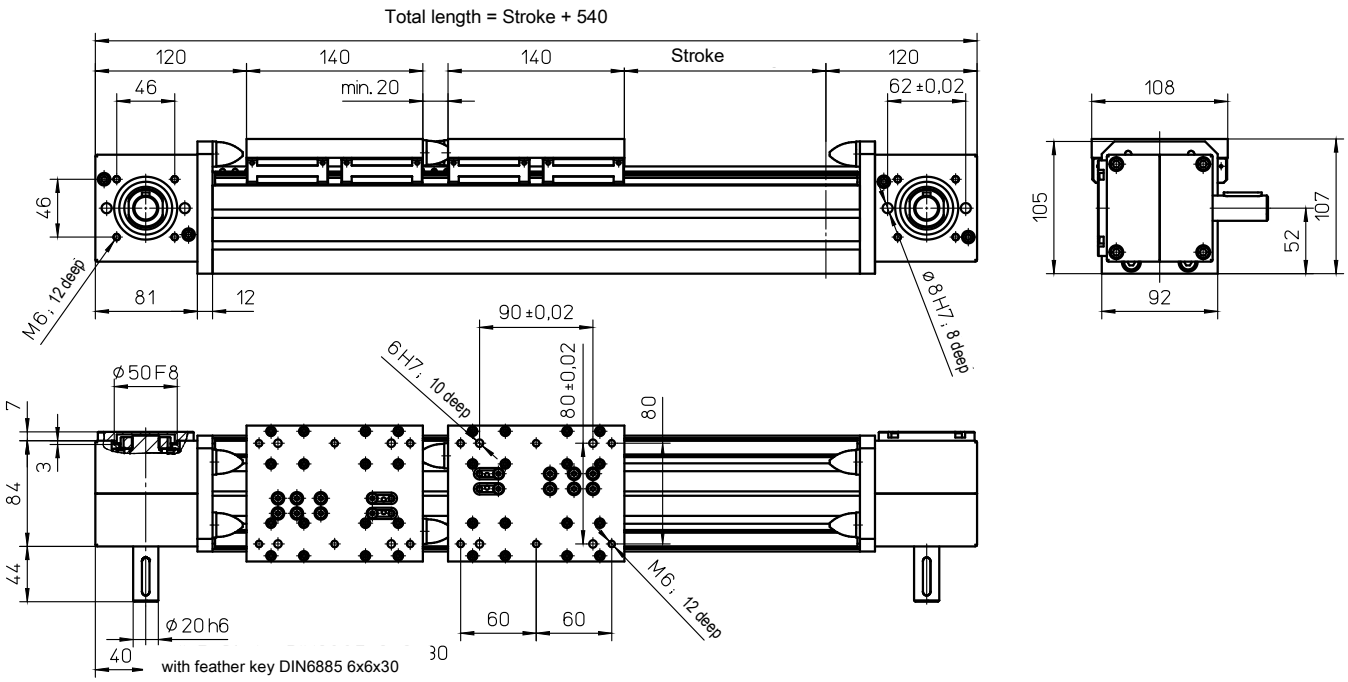

Weights	ZSSD
Basic length without stroke:	11.50 kg
100 mm stroke:	1.00 kg
Entire carriage 140 mm:	1.90 kg
Max. total length: (longer on request)	8100 mm

Technical Data	ZSSD
Max. speed:	5.00 m/s
Max. acceleration:	60 m/s²
Repeat accuracy:	± 0.08 mm
Idle torque:	2.90 Nm
Moment of inertia:	2.20 •10^{-3} kgm²
Drive element:	2 x toothed belt **16 AT10**
Stroke per revolution:	200 mm

Forces and moments

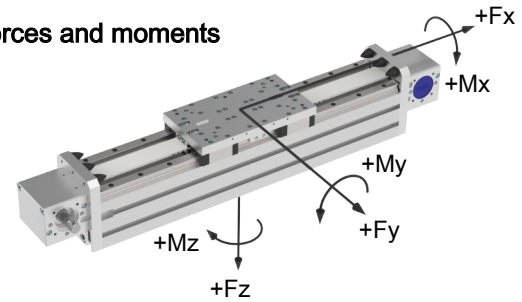

	ZSSD
Forces	Dynamic [N]
F_x c)	1150
F_Y	2500
F_Z	3000
Moments	Dynamic [Nm]
M_X	400
M_Y	1000
M_Z	800

c) Maximum value (see diagram "F_X-v-Diagram")

F_X - v - Diagram

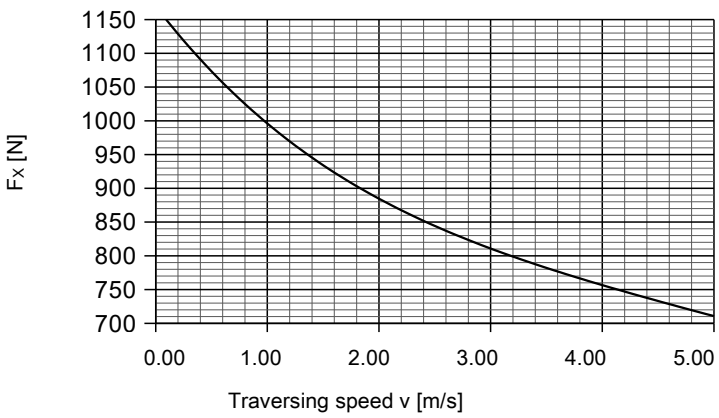

These data apply to each carriage.