with toothed belt drive and roller guide (ZRS) or rail guide (ZSS)

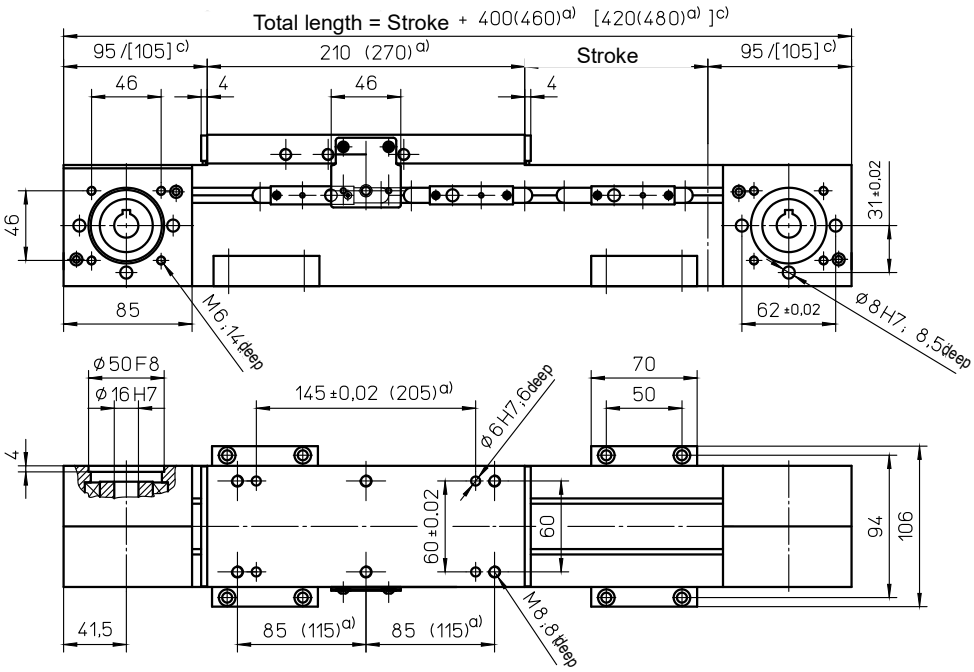

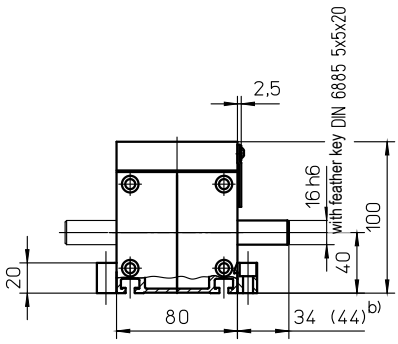

a) Data in brackets refer to long carriage

b) Data in brackets refer to version GX

c) Data in square brackets refer to version with cover band

Mounting elements see page B50

Weights	ZRS	ZSS
Basic length without stroke:	5.50 kg	6.10 kg
100 mm stroke:	0.60 kg	0.85 kg
Entire carriage 210 mm:	2.10 kg	1.80 kg
Entire carriage 270 mm:	2.70 kg	2.30 kg

Max. total length: 8000 mm
(longer on request)

Technical Data	ZRS	ZSS
Max. speed:	8.00 m/s	5.00 m/s
Max. acceleration:	40 m/s²	
Repeat accuracy:	± 0.08 mm	
Idle torque:	1.50 Nm	
Moment of inertia:	3.30 •10^{-3} kgm²	3.00 •10^{-3} kgm²
Drive element:	Toothed belt **32 AT5-E**	
Stroke per revolution:	220 mm	

Forces and moments

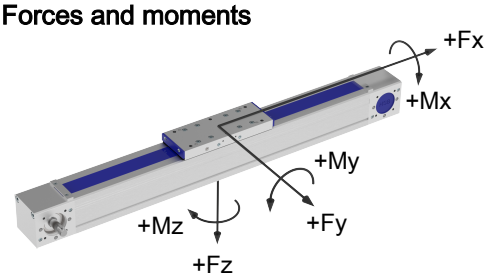

	ZRS	ZSS
Forces	Dynamic [N]	
F_x d)	1350	
F_Y	500	800
F_Z	1500	3000
$-F_Z$	800	2000
Moments	Dynamic [Nm]	
M_X	50	100
M_Y	180 (220)	250 (300)
M_Z	100 (130)	250 (300)

d) Maximum value (see diagram "F_X-v-Diagram")
Data in brackets refer to long carriage plate (270)

F x - v - Diagram

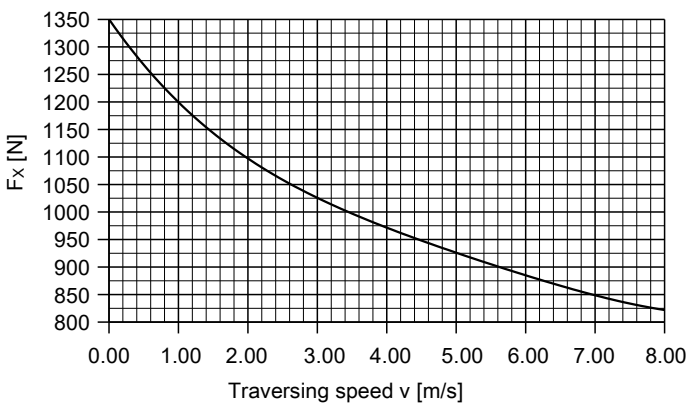

For mechanical linear drives with roller guide,
the static load rating "C_{stat}" (page TL11) applies for static loads.

Release: 05.05.2021