with toothed belt drive and roller guide (ZRS) or rail guide (ZSS)

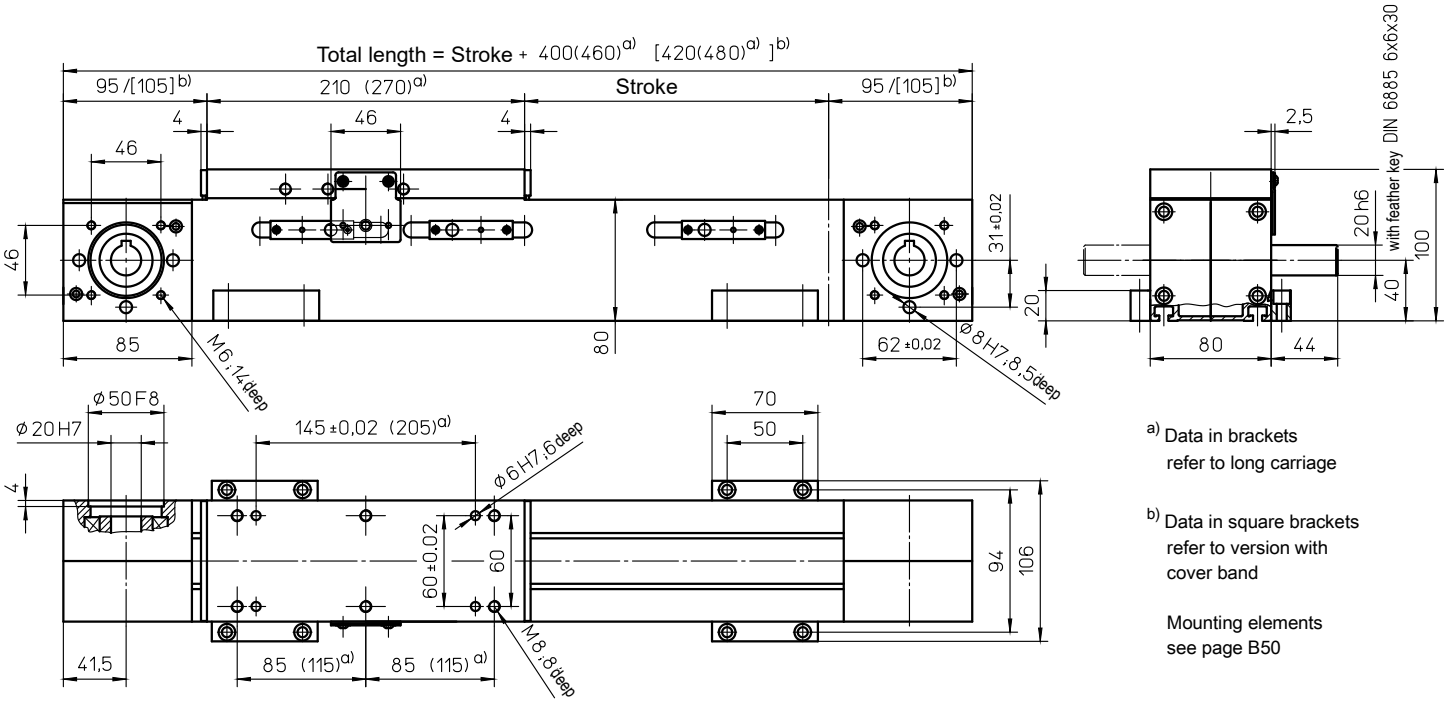

a) Data in brackets refer to long carriage

b) Data in square brackets refer to version with cover band

Mounting elements see page B50

Weights	ZRS	ZSS
Basic length without stroke:	5.03 kg	7.80 kg
100 mm stroke:	0.65 kg	0.98 kg
Entire carriage 210 mm:	3.00 kg	2.75 kg
Entire carriage 270 mm:	3.70 kg	3.25 kg

Max. total length: 8000 mm
(longer on request)

Technical Data	ZRS	ZSS
Max. speed:	8.00 m/s	5.00 m/s
Max. acceleration:	40 m/s²	
Repeat accuracy:	± 0.08 mm	
Idle torque:	1.80 Nm	
Moment of inertia:	$4.20 \cdot 10^{-3}$ kgm²	$4.00 \cdot 10^{-3}$ kgm²
Drive element:	Toothed belt **32 AT10**	
Stroke per revolution:	210 mm	

Forces and moments

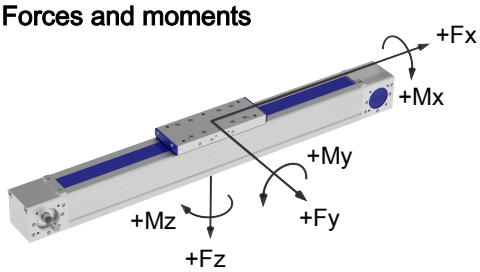

	ZRS	ZSS
Forces	Dynamic [N]	
F_x d)	2200	
F_Y	1000	1600
F_Z	2500	4000
$-F_Z$	1500	3000
Moments	Dynamic [Nm]	
M_X	100	300
M_Y	300 (400)	500 (640)
M_Z	180 (250)	500 (640)

d) Maximum value (see diagram "F_X-v-Diagram")
Data in brackets refer to long carriage plate (270)
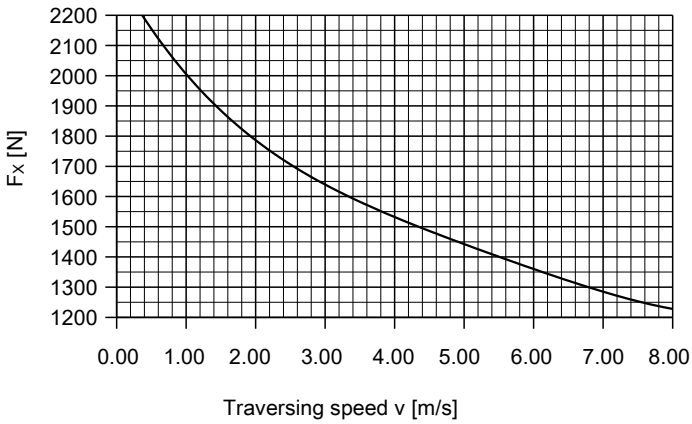
F_X - v - Diagram