with toothed belt drive and roller guide (ZRS) or rail guide (ZSS)

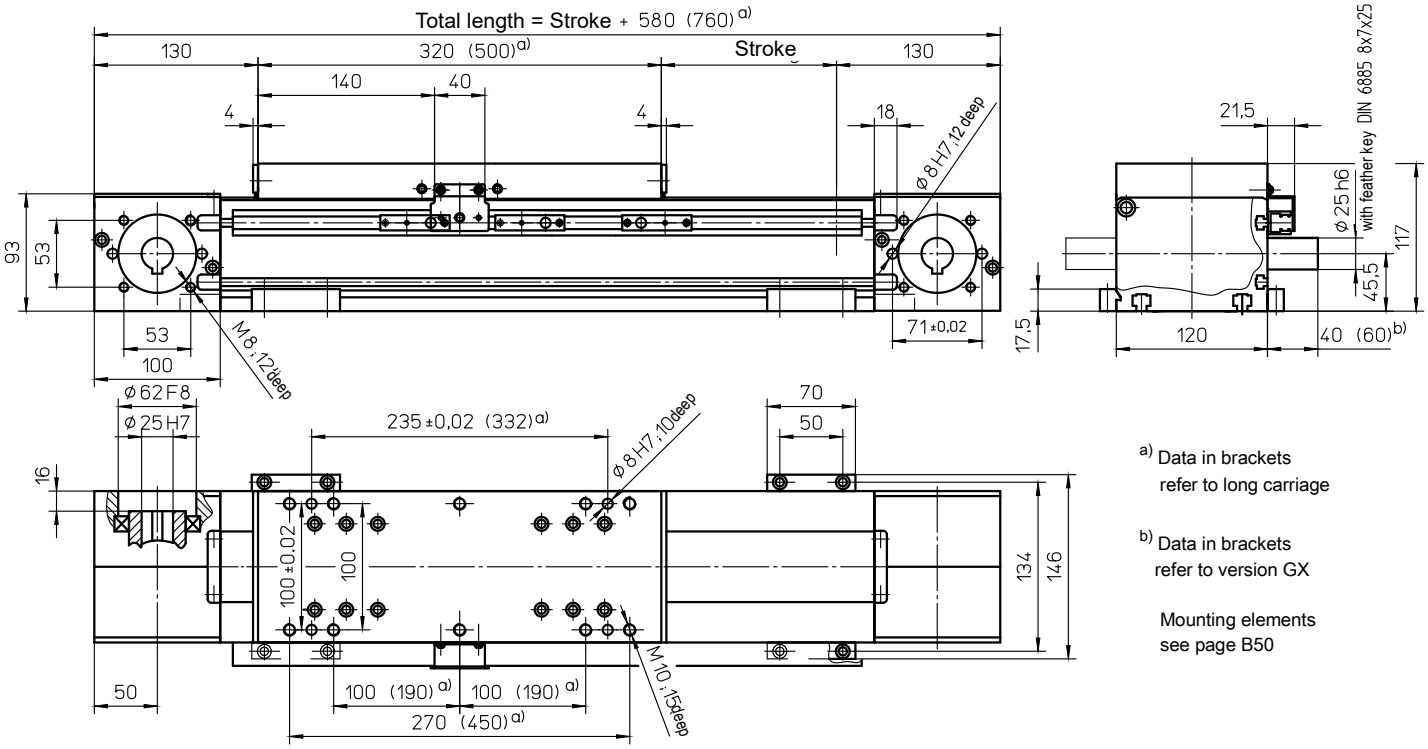

a) Data in brackets refer to long carriage

b) Data in brackets refer to version GX

Mounting elements see page B50

Weights	ZRS	ZSS
Basic length without stroke:	12.50 kg	13.00 kg
100 mm stroke:	1.30 kg	1.70 kg
Entire carriage 320 mm:	6.00 kg	6.50 kg
Entire carriage 500 mm:	9.40 kg	10.20 kg

Max. total length: 8100 mm
(longer on request)

Technical Data	ZRS	ZSS
Max. speed:	8.00 m/s	5.00 m/s
Max. acceleration:	60 m/s²	
Repeat accuracy:	± 0.08 mm	
Idle torque:	3.20 Nm	
Moment of inertia:	$1.50 \cdot 10^{-2}$ kgm²	$1.60 \cdot 100^{-2}$ kgm²
Drive element:	Toothed belt **50 ATL10**	
Stroke per revolution:	240 mm	

Forces and moments

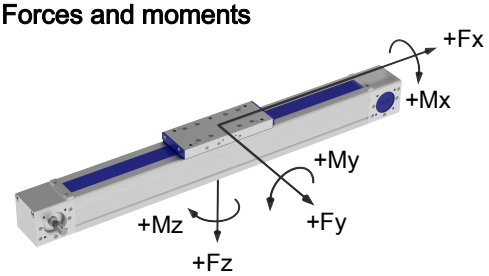

	ZRS	ZSS
Forces	Dynamic [N]	
F_x d)	4000	
F_Y	2500	3000
F_Z	6000	8000
$-F_Z$	3000	4000
Moments	Dynamic [Nm]	
M_X	350	400
M_Y	700 (1000)	1200 (1500)
M_Z	500 (1000)	600 (800)

d) Maximum value (see diagram "F_X-v-Diagram")
Data in brackets refer to long carriage plate (500)
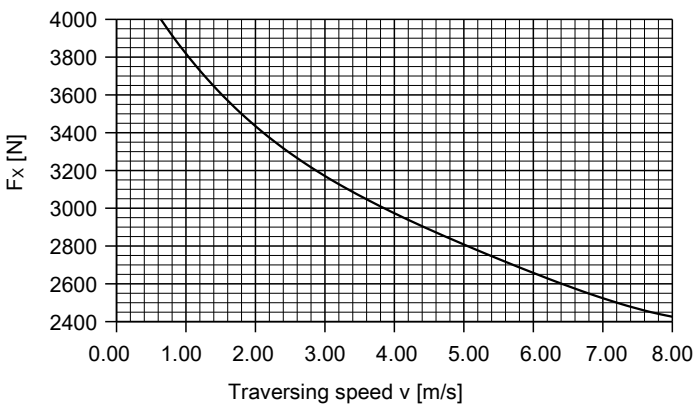
F_X - v - Diagram